ARO®

# SHOCK BLOCKER™

FLUID PULSATION DAMPENERS


Ingersoll Rand®

# The Automatic Shock Blockers

For over 85 years, the ARO® Fluid Products business of Ingersoll Rand® has developed partnerships with more than 200 original equipment manufacturers and distributors, enabling us to better focus on the unique pumping needs of many industries. It's a strategic merger of our partners' application expertise, along with our decades-long legacy of designing and building outstanding piston and diaphragm pumps.

*Foaming* *Material Pulsation* *Hydraulic Shock* *Splashing*

Diaphragm and piston pumps of any type have at least two points in their cycle where they provide no pressure or flow to a process. The unwanted result of this pressure fluctuation can often be material foaming, material pulsation, hydraulic shock or material splashing. While traditional pulsation dampeners can help reduce unwanted pulsation and other problems, they also require operator intervention and adjustments.

## Applications where Shock Blockers provide advantages:

- Fluid Dispensing Control
- Inline Flow Meter Protection
- Long Pipe Runs
- Equipment Protection (Pumps, Meters, Piping)
- High Back Pressure Application

# Design Features

1″, 2″ AND 3″ SHOCK BLOCKERS

- Automatic Air Adjustment - compensates for fluctuations in fluid pressure without operator intervention.
- Significant Pulsation Reduction - the new Shock Blockers deliver an average 60% - 80% pulsation reduction in high back pressure applications.
- Perfect for Process Applications - pulsation reduction in long piping runs help prevent costly fluid pipe and downstream valve damage.
- Built for High-Flow/Aggressive Fluid Applications - the 2″ models can handle up to 159 in.$^3$ maximum fluid volume, and 3″ models up to 509 in.$^2$ maximum fluid volume.
- Broad Material Range for Compatibility - choose from Kynar®, polypropylene, groundable acetal (1″ models) or aluminum, cast iron or stainless steel (2″ & 3″ models) body materials for optimum pump-to-pulsation dampener compatibility.
- Broad Diaphragm/Bladder Fluid Compatibility - choose from Santoprene®, Nitrile, PTFE, Viton or Urethane for optimum fluid-to-diaphragm compatibility.
- Bolted Construction - for leak-free vessel integrity and a safer work-site.
- Ultra-Rugged Construction for Long service Life - both inside and out, the new Shock Blockers re built tough to deliver worry free, near pulse-free fluid handling.

## Performance Charts

**1/2" Pump w/1" Shock Blocker — % Reduction In Pulsation**

| Fluid Pressure PSI Back Pressure | 1 | 2 | 3 | 4 | 5 | 10 | 12 |
|---|---|---|---|---|---|---|---|
| 20 | 94 | | 81 | | | 70 | 65 |
| 40 | 92 | | | 83 | | | 70 |
| 60 | 91 | | | | 85 | | |

Flow (GPM)

**1" Pump w/1" Shock Blocker — % Reduction In Pulsation**

| Fluid Pressure PSI Back Pressure | 1 | 5 | 10 | 15 | 20 | 25 | 30 |
|---|---|---|---|---|---|---|---|
| 20 | 90 | 80 | 70 | | | | 60 |
| 40 | 99 | | 75 | | | 70 | |
| 60 | 85 | | 80 | | 75 | | |
| 80 | 85 | | | | 80 | | |

Flow (GPM)

**1-1/2" Pump w/2" Shock Blocker — % Reduction In Pulsation**

| Fluid Pressure PSI Back Pressure | 1 | 20 | 40 | 60 | 80 |
|---|---|---|---|---|---|
| 40 | 80 | | | | 70 |
| 60 | 89 | | | 70 | |
| 80 | 80 | | 65 | | |
| 100 | 80 | 70 | | | |

Flow (GPM)

**2" Pump w/2" Shock Blocker — % Reduction In Pulsation**

| Fluid Pressure PSI Back Pressure | 3 | 30 | 70 | 100 | 130 |
|---|---|---|---|---|---|
| 40 | 65 | | | | 55 |
| 60 | 70 | | | 60 | |
| 80 | 70 | | 55 | | |
| 100 | 60 | 55 | | | |

Flow (GPM)

**3" Pump w/3" Shock Blocker — % Reduction In Pulsation**

| Fluid Pressure PSI Back Pressure | 5 | 75 | 125 | 150 | 200 |
|---|---|---|---|---|---|
| 40 | 60 | | | | 50 |
| 60 | 65 | | | 55 | |
| 80 | 60 | | 50 | | |
| 100 | 60 | 50 | | | |

Flow (GPM)

# Design Features

1″ SHOCK BLOCKER

1. **Fracture-Resistant Fluid Inlet** minimizes the chance of cracking the main vessel's housing while threading.
2. **Bladder** flexes as fluid pulses from the pump.
3. **Enlarged Air Chamber** provides superior smoothing of fluid pressure.
4. **Flange Bolt Fasteners** make assembly faster and easier and insures a leak-free seal.
5. **Pressure Gauge** (included) provides easy visibility for convenient process monitoring.
6. **Pressure Relief Valve** minimizes the possibility of vessel over-pressurization (above 125 PSI).
7. **Grounding Lug** provides convenient ground connection.
8. **Air-Tamer Auto-Adjust Assembly** Unlike other air adjusters, Air-Tamer has no lip seals along its piston to wear out, and all moving parts are encased inside the dampener housing.
9. **Bleed Port** can be plumbed to drain off material in the event of bladder failure.
10. **Bladder Guard** prevents damage or rupture of the bladder.

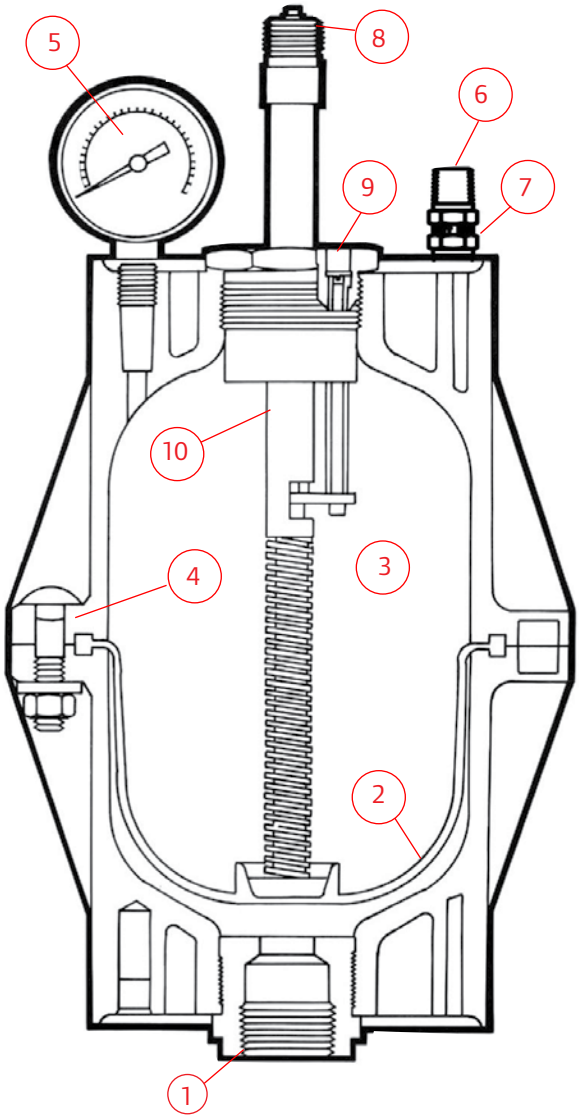


**Typical Installation** Used with 1/2″ & 1″ Ported Diaphragm Pumps

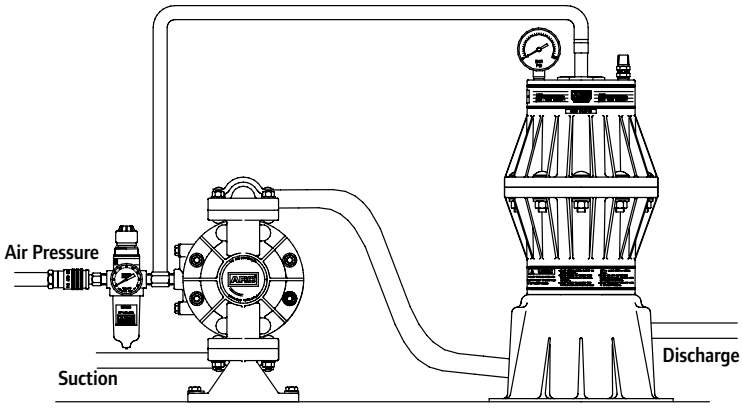

# Shock Blocker 1″ Port

*1″ Shock Blocker*

## Specifications

| | |
|---|---|
| Pulsation Dampener Type | Non-Metallic / Automatic |
| Material | See model description chart |
| Weight | Polypropylene 8.4 lbs (3.8 kgs)<br>Conductive Acetal 8.6 lbs (3.9 kgs)<br>Pure Kynar (PVDF) 9.0 lbs (4.1 kgs) |
| Material Inlet/Outlets | SB10X-AXX 1″ - NPTF (Female) (Both are available)<br>SB10X-BXX - 1″ BSP (Female) |
| Air Inlet | Air Tamer is 3/8″ NPTF (Male) (Standard) |
| Maximum Air Inlet Pressure | 100 PSIG (6.9 bar) |
| Maximum Material Inlet Pressure | 100 PSIG (6.9 bar) |
| Maximum Temperature Limits | Polypropylene 35° F - 100° F (+1.6° C - 37.7° C)<br>Conductive Acetal 10° F - 180° F (-12° C - 82° C)<br>Pure Kynar 10° F - 200° F (-12° C - 93° C) |
| Maximum Fluid Volume | 57 In.$^3$ (931) |

## Dimensions

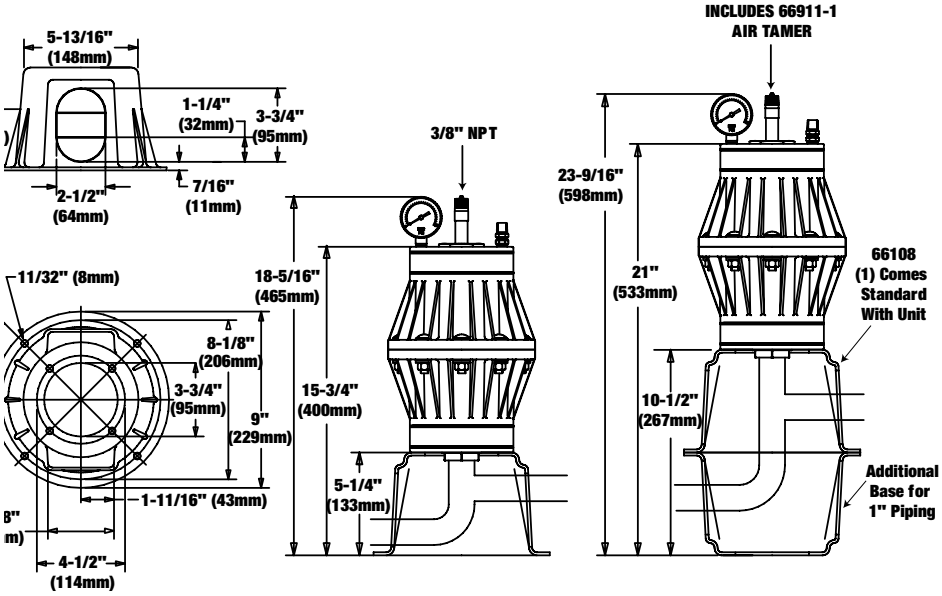


## Ordering

| Position | 1 | 2 | 3 | | 4 | 5 | 6 | | 7 |
|---|---|---|---|---|---|---|---|---|---|
| Example: | SB | 10 | X | - | X | X | X | - | X |

| Position 1 Model Series | Position 2 Size | Position 3 Air Body | Positon 4 Thread | Position5 Fluid Construction | Position 6 Hardware | Position 7 Diaphragm |
|---|---|---|---|---|---|---|
| SB- Shock Blocker | 10 - 1" | P - Polypropylene<br>K - Pure Kynar (PVDF)<br>D - Conductive Acetal | A - NPT<br>B - BSP | P - Polypropylene<br>K - Pure Kynar (PVDF)<br>D - Conductive Acetal | S - Stainless (304) | A - Santoprene<br>C - Hytrel<br>T - PTFE<br>U - Urethane |

# Design Features

2″ AND 3″ SHOCK BLOCKER

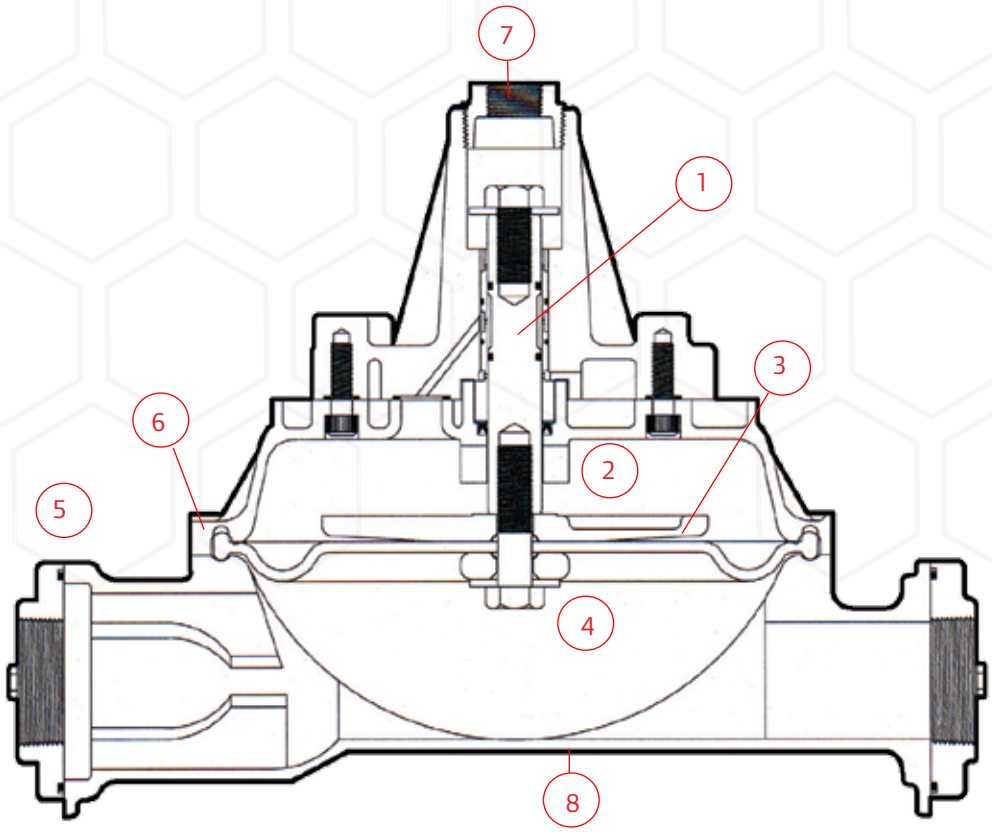


1. **Auto-Adjust Valve** Similar to ARO's patented Air Tamer design; automatically adjusts to fluid pressure to reduce pulsation
2. **Air Chamber** Large air chamber offers air support to the diaphragm during the pulsation process and smoothing of fluid pressure
3. **Diaphragm** flexes as fluid pulses from the pump
4. **Large Fluid Section** offers sensitivity for 2″ and 3″ diaphragm pump fluid volumes
5. **Fluid Inlet/Outlet Ports** NPT/BSP internal pipe threads
6. **Bolted Fasteners** For leak-free integrity, similar design and characteristics which set ARO Diaphragm Pumps apart from the competition
7. **Air Inlet** Will accept same air line pressure as diaphragm pump
8. **Part Interchangeability** Utilize parts from the 2″ & 3″ diaphragm pump

**Typical Installation** SB20X use with 1-1/2″ and 2″ Metal Diaphragm Pumps, SB30X use with 3″ Metal Diaphragm Pumps

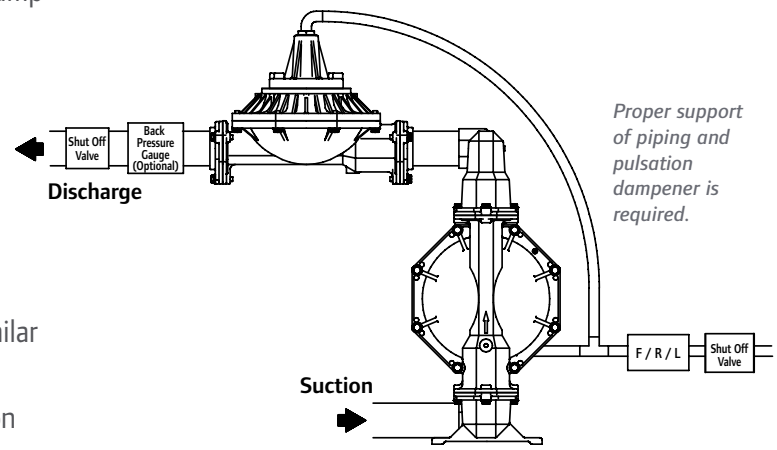

# Shock Blocker 2″ and 3″ Ports


## Specifications

| | | |
|---|---|---|
| Pulsation Dampener Type | Metallic / Automatic | |
| Material | See model description chart | |
| Weight | SB20X Aluminum (fluid cap) | 29 lbs (13.2 kgs) |
| | SB20X Cast Iron (fluid cap) | 70 lbs (31.8 kgs) |
| | SB20X Stainless St. (fluid cap) | 71 lbs (32.2 kgs) |
| | SB30X Aluminum (fluid cap) | 41 lbs (18.6 kgs) |
| | SB30X Cast Iron (fluid cap) | 94 lbs (42.6 kgs) |
| | SB30X Stainless St. (fluid cap) | 96 lbs (43.5 kgs) |
| Material Inlet/Outlets | SB20X-AXX-X | 2″ -11-1/2 NPTF -1 |
| | SB20X-BXX-X | 2″ -11 BS Rp |
| | SB30X-AXX-X | 3″ -8 NPTF -1 |
| | SB30X-BXX-X | 3″ -11 BS Rp |
| Air Inlet | 3/4″ - 14 NPT (female) | |
| Maximum Air Inlet Pressure | 120 PSIG (8.3 bar) | |
| Maximum Material Inlet Pressure | 120 PSIG (8.3 bar) | |
| Maximum Temperature Limits | 200° F (93° C) | |
| Maximum Fluid Volume | SB20X 159 in.$^3$ (2.61 lit.) | |
| | SB30X 509 in.$^3$ (3.84 lit.) | |

## Dimensions

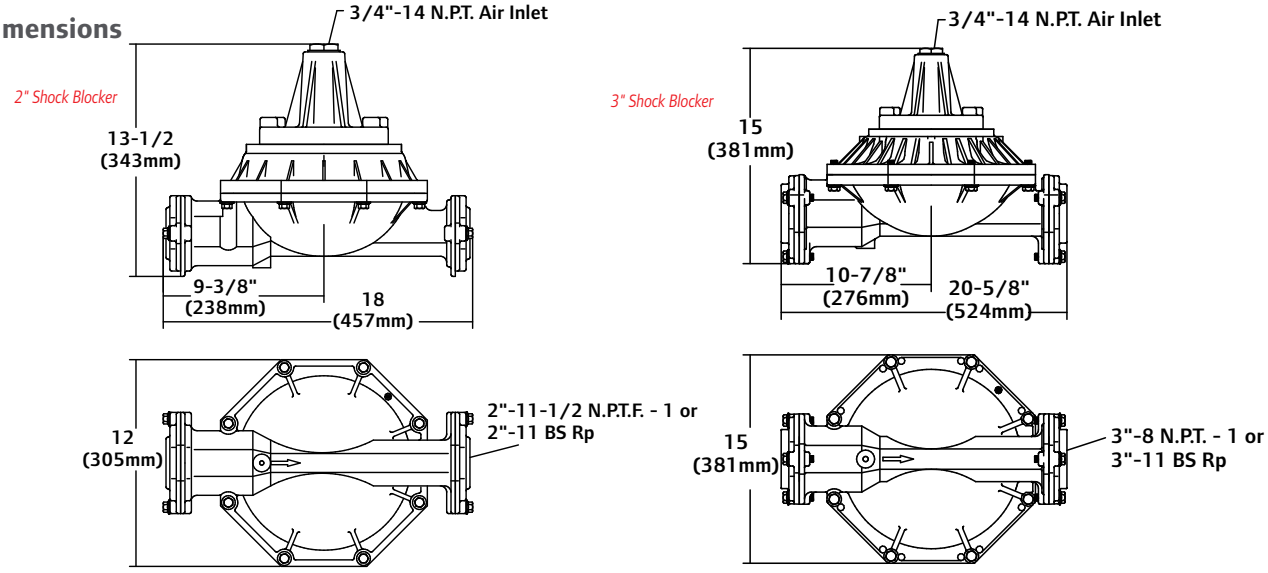


## Ordering

| Position | 1 | 2 | 3 | | 4 | 5 | 6 | | 7 |
|---|---|---|---|---|---|---|---|---|---|
| Example: | SB | XX | X | - | X | X | X | - | X |

| Position 1 Model Series | Position 2 Size | Position 3 Air Body | Positon 4 Thread | Position5 Fluid Construction | Position 6 Hardware | Position 7 Diaphragm |
|---|---|---|---|---|---|---|
| SB- Shock Blocker | 20 - 2"<br>30 - 3″ | A - Aluminum<br>C - Cast Iron*<br>S - Stainless Steel | A - NPT<br>B - BSP | A - Aluminum<br>C - Cast Iron<br>S - Stainless Steel | S - Stainless (304)<br>P - Plated Steel | A - Santoprene<br>G - Nitrile<br>T - PTFE<br>V - Viton |

** Available with 2" model only*

Distributed by:

www.AROzone.com arotechsupport@irco.com youtube.com/aropumps (800) 495-0276

ARO®

ARO® is a brand of Ingersoll Rand. Ingersoll Rand (NYSE:IR) advances the quality of life by creating comfortable, sustainable and efficient environments. Our people and our family of brands—including Club Car®, Ingersoll Rand®, Thermo King® and Trane®—work together to enhance the quality and comfort of air in homes and buildings; transport and protect food and perishables; and increase industrial productivity and efficiency. We are a $13 billion global business committed to a world of sustainable progress and enduring results. For more information, visit www.ingersollrand.com.

We are committed to using environmentally conscious print practices.

 IRITS-1016-205