VISION 2000 ®

Brass housing
Flow range 2 - 25 l/min

Remag AG
Mess- und Regeltechnik
Mittelholzerstrasse 8
3006 Bern (Switzerland)
Tel. +41 31 932 01 11
Fax +41 31 931 08 67
info@remag.ch
www.remag.ch

Turbine Flowmeter VISION 2000 ® Brass housing

For low viscous and non-aggressive liquids, for low flow rates

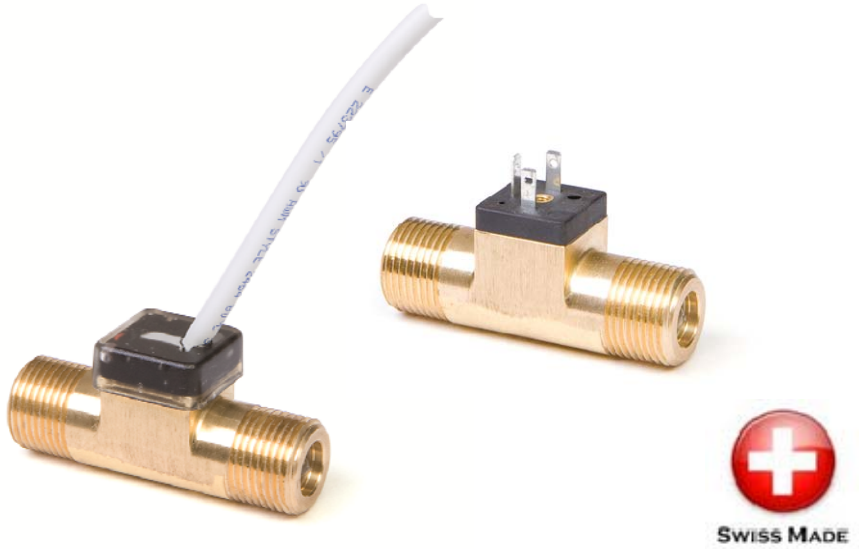

Low Cost

Small, compact size

Operates in any position

High operating pressure

Temperature range -20°C up to 100°C

High accuracy +/- 3%

Maintenance free

Operating Principle:

Fluid flow causes a bladed turbine inside the VISION housing to turn at an angular velocity directly proportional to the velocity of the fluid measured. As the blades pass breath a magnetic pickup coil, a frequency signal is generated.
Each pulse is equivalent to a discrete volume of fluid. The frequency pulse is directly proportional to the turbine angular velocity and the flow rate.

The large number of pulses gives a good resolution. As the mass of the turbine are very small the response time is very short. It is not necessary to install a straight length of pipeline at the up streamside.
The simple mechanical construction of the sensor VISION 2000 guarantees a long lifespan without any loss of accuracy. Pressure pulses do not affect the measuring system

Liquid media:

Water, many Water-based liquids, Oil, Gasoline, Diesel, Antifreeze, Refrigerants, Paints, Ink…

Applications:

Industrial applications:

Cooling systems, Dosing systems, Water treatment units, Heating systems, Solar plants…

Automotive:

Fuel consumption measurement, Fuel injection systems…

Remag AG
Mess- und Regeltechnik
Mittelholzerstrasse 8
3006 Bern (Switzerland)
Tel. +41 31 932 01 11
Fax +41 31 931 08 67
info@remag.ch
www.remag.ch

Specifications:

Turbine Type	**2008 4F23**	**2008 2F66**
Flow rate (l/min)	3 - 25	2 - 8
K-factor (PPL)	1000	4200
Frequency (Hz)	50 – 416,67	140 - 560
DN mm	8	8

Operating pressure	25 bar	
Burst pressure	200 bar	
Inlet / Outlet ports	G 3/8“	NPT 3/8“
Operating temperature	- 20°C to +100°C	
Accuracy	+/- 3% of Reading	
Repeatability	< 0,50 % under the same operating conditions	
Viscosity	up to 16 cSt	
Filter	20 to 40 Microns recommended	
Electrical connection	3 Pin (2,8 x 0,5) Mini DIN Connector, EN 60529	
	Round Cable 3 x AWG24 with free cable ends	
Input power	5 – 24 VDC	
Power consumption	~ 8 mA	
Output (Hz)	NPN Sinking Open Collector	
Output current	Max. 20 mA (Pull-Up resistor required, see wiring diagram)	
Materials	Housing	Brass
	Turbine	PA12 Ferrite
	Bearings	Trogamid / PTFE
Weight	~ 80 g	

Approximate pressure drop Δp in bar, with water flow at 20°C (68°F):

Type	**2008 4F23**	**2008 2F66**
2 l/min	~ 0	~ 0
5 l/min	0,05	0,05
10 l/min	0,17	0,20
15 l/min	0,27	
20 l/min	0,48	
25 l/min	0.65	

Remag AG
Mess- und Regeltechnik
Mittelholzerstrasse 8
3006 Bern (Switzerland)
Tel. +41 31 932 01 11
Fax +41 31 931 08 67
info@remag.ch
www.remag.ch

Dimensions (mm) / Wiring:

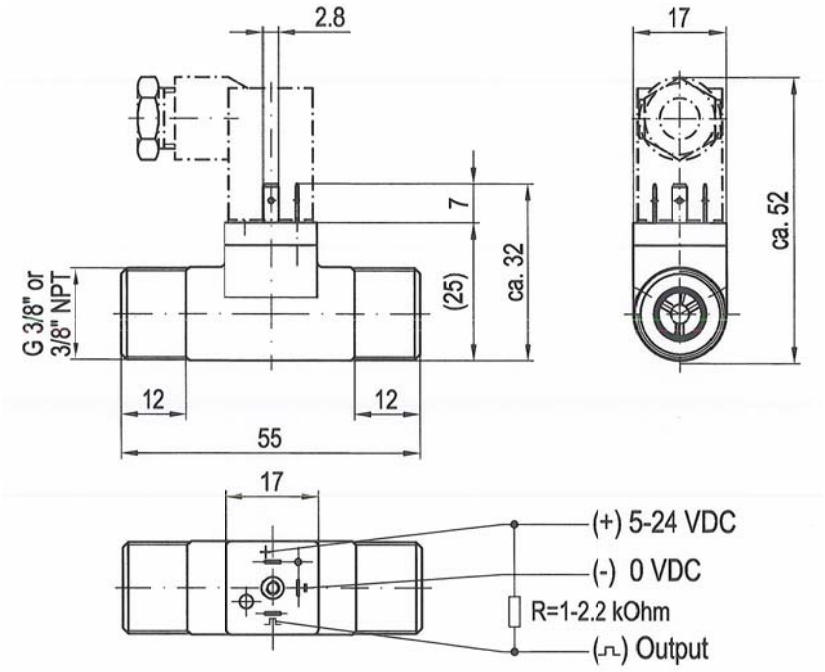

G 3/8“ or 3/8“ NPT

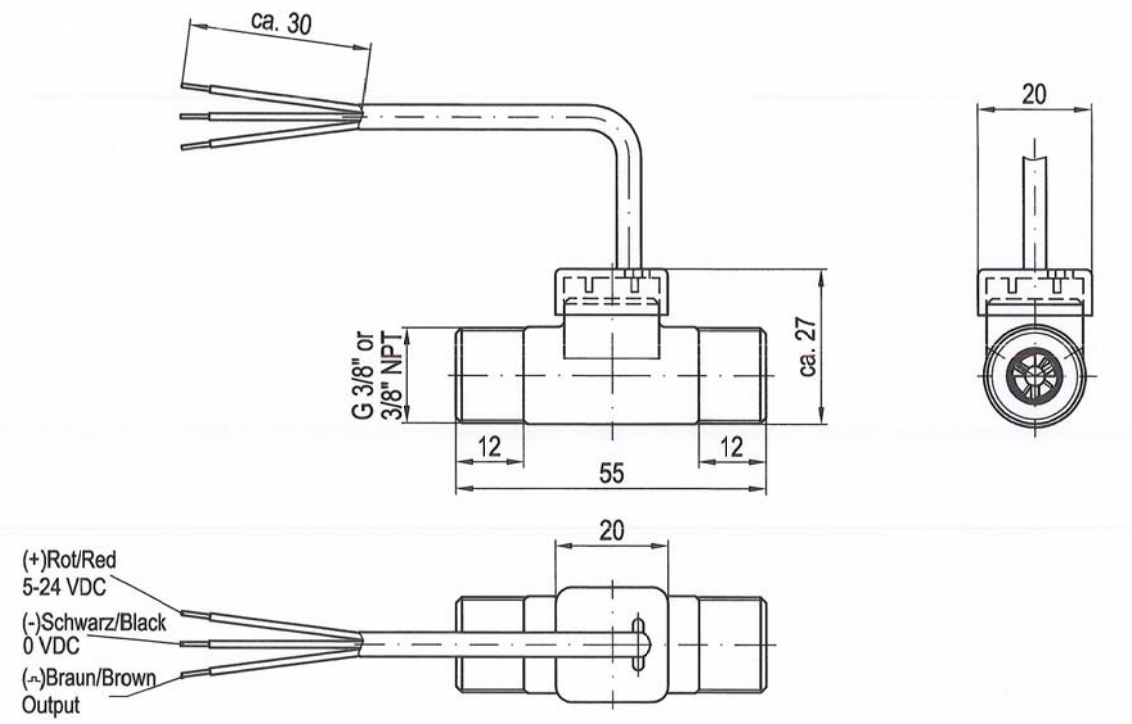

G 3/8“ or 3/8“ NPT with round cable 3 x AWG 24 and free cable ends

Remag AG
Mess- und Regeltechnik
Mittelholzerstrasse 8
3006 Bern (Switzerland)
Tel. +41 31 932 01 11
Fax +41 31 931 08 67
info@remag.ch
www.remag.ch

Turbine Type	**4F23**	**2F66**
Flow range (l/min)	3 - 25	2 - 8
K-Factor (PPL)	1000	4200
G 3/8“	47000	47000
NPT 3/8“	47001	47001

Example:

46700	-	163	-	4F23	-	1
Housing		**El. Connection**		**Turbine type**		**Cable length**
See chart		163 = DIN Connector 165 = Cable		See chart		1 = Cable length 1m 2 = Cable length 2m 3 = Cable length 3m

Installation and Operation Instructions:

- Check compatibility of media with sensor material.
- Solid ingredients in media require a filter in front of a senor. Avoid absolutely fibrous soiling.
- Install sensor into properly cleaned pipeline only.
- Check electrical connection according to the electrical wiring plan.
- Do not exceed the specific indications.
- The *VISION 2000* ® is a volumetric measuring device; any air/gas in the liquid will be included in measured volume.
- Correctly installed, the sensor works entirely maintenance free.
- Do not blow out the turbine flowmeter with compressed air, the bearings can be damaged.