FOR REFERENCE ONLY

# SOLENOID VALVE

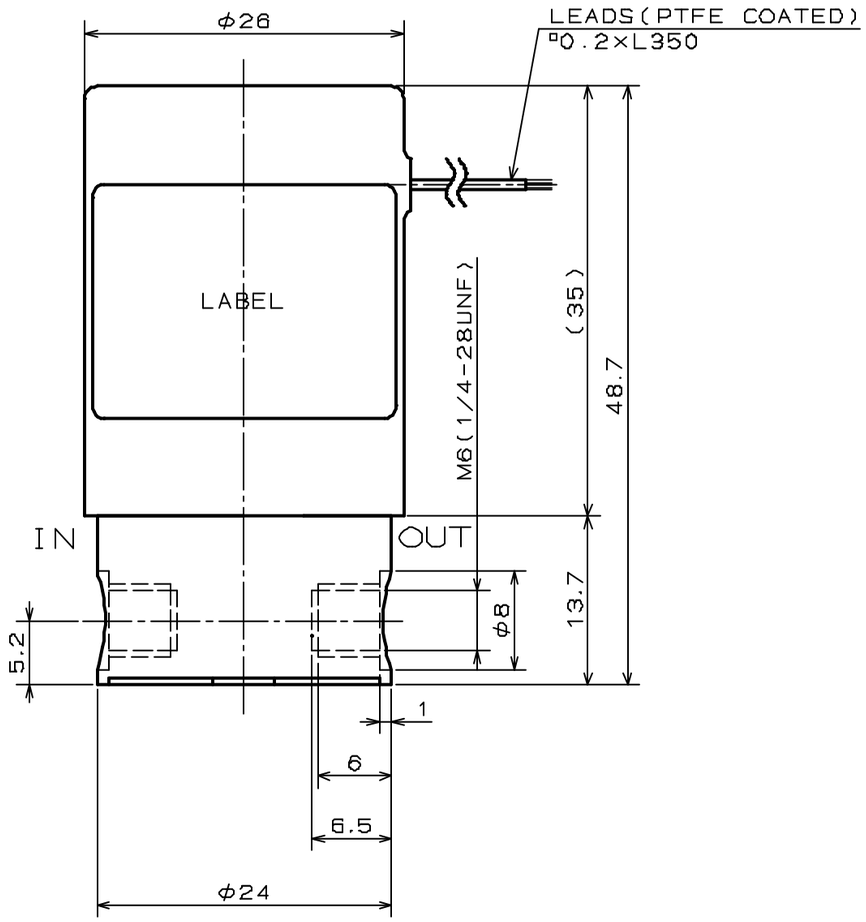


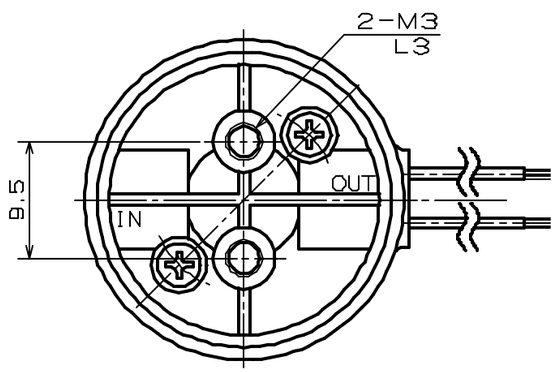


## SPECIFICATIONS for MODEL MCV-2R-NM6(1/4U)F

| | | |
|---|---|---|
| ORIFICE DIAMETER | : | 2mm |
| PORT CONNECTION | : | M6、1/4-28UNF |
| OPERATING PRESSURE RANGE | : | INLET -27 ~ 100kPa {-200mmHg ~ 1.0bar} |
| | | OUTLET 0 ~ 50kPa {0 ~ 0.5bar} |
| FLUID MEDIA | : | FLUIDS CHEMICALLY COMPATIBLE WITH MATERIALS BELOW |
| MEDIA TEMPERATURE RANGE | : | 0 ~ 60℃ |
| AMBIENT TEMPERATURE RANGE | : | 0 ~ 60℃ |
| RATED VOLTAGE | : | 12、24、90VDC、100AC(SILICON RECTIFIER ATTACHED) |
| POWER CONSUMPTION | : | 2.6W(90VDC、100VAC:3.5W) |
| DUTY CYCLE | : | CONTINUOUS |
| COIL TEMPERATURE INCREASE | : | MAX 50℃ FROM ROOM TEMPERATURE (90VDC、100VAC:MAX60℃) |
| INSULATION CLASS | : | CLASS B |
| DIELECTRIC STRENGTH | : | 1500VAC FOR 60s |

MODEL NUMBERS

| MODEL NUMBER | PORT CONNECTION |
|---|---|
| MCV-2R-NM6F | M6 |
| MCV-2R-N1/4UF | 1/4-28UNF |

WETTED MATERIALS

| PART NAME | MATERIAL | REQD. | NOTE |
|---|---|---|---|
| | | | |
| | | | |
| DIAPHRAGM | FPM | 1 | |
| VALVE BODY | PPS | 1 | |

SOLENOID VALVE

MCV-2R-NM6(1/4U)F

TAKASAGO ELECTRIC INC MIDORIKU. NAGOYA. JAPAN