FOR REFERENCE ONLY

SOLENOID VALVE

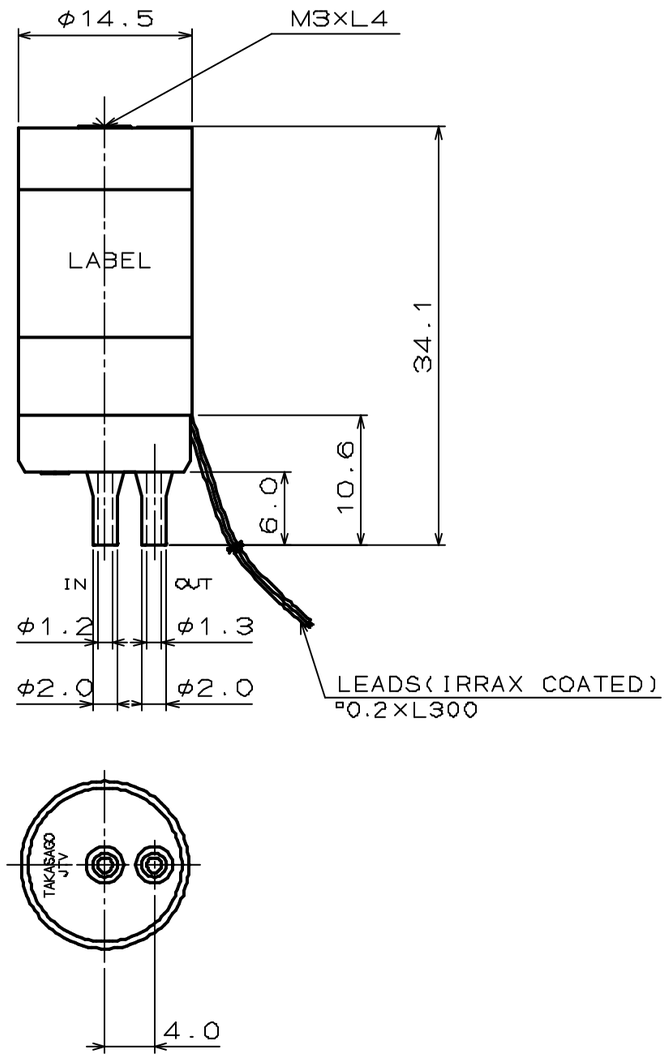

SPECIFICATIONS FOR MODEL JTV-2

ORIFICE DIAMETER	: 1.2mm
TUBE DIAMETER	: I.D.1.5mm O.D.2.5mm
TUBE MATERIAL	: SILICONE
OPERATING PRESSURE RANGE	: IN 0 ~ 80kPa {0 ~ 0.8bar} OUT 0 ~ 10kPa {0 ~ 0.1bar}
FLUID MEDIA	: FLUIDS CHEMICALLY COMPATIBLE WITH MATERIALS BELOW
MEDIA TEMPERATURE RANGE	: 0 ~ 40℃
AMBIENT TEMPERATURE RANGE	: 0 ~ 40℃
RATED VOLTAGE	: 12VDC、24VDC
POWER CONSUMPTION	: 1W
DUTY CYCLE	: CONTINUOUS
COIL TEMPERATURE INCREASE	: MAX. 50℃ FROM ROOM TEMPERATURE
INSULATION CLASS	: CLASS E
DIELECTRIC STRENGTH	: 1500VAC FOR 60s

WETTED MATERIALS

PART NAME	MATERIAL	REQD.	NOTE
DIAPHRAGM	FPM	1	
VALVE BODY	U-POLYMER®	1	

SOLENOID VALVE

JTV-2