KAPPA 25 max. 29.5 l/min - 7.8 GPM • 30 bar - 435 PSI • 550 RPM
KAPPA 32 max. 36 l/min - 9.5 GPM • 30 bar - 435 PSI • 550 RPM

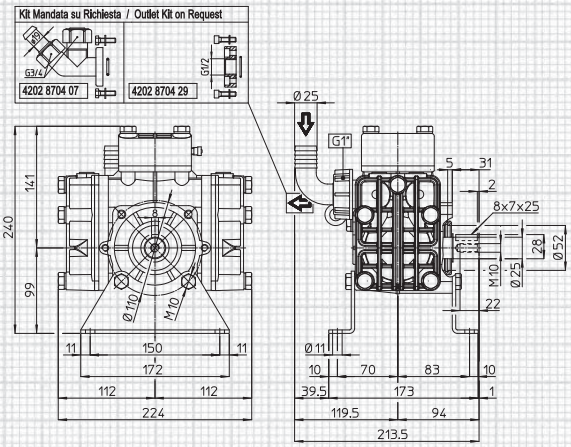

alberi P. di F. disponibili available P.T.O. shaft

1-4-14-15

1-4-14-15

Per le dimensioni degli Alberi P. di F. vedi pag. 35

For P.T.O. Shaft dimensions see page 35

applicazioni shaft adaptors

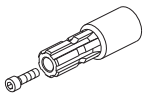

1

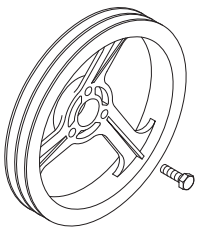

4

14

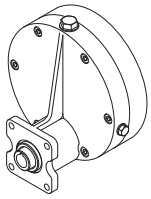

RIDUTTORI **15**
Vedi pag. 42/43

*GEAR REDUCTIONS **15***
See page 42/43

MOD.	RPM	0 bar / 0 PSI				5 bar / 72 PSI				10 bar / 145 PSI				20 bar / 290 PSI				30 bar / 435 PSI				
		Portata *Flow rate*		Potenza *Power*		Portata *Flow rate*		Potenza *Power*		Portata *Flow rate*		Potenza *Power*		Portata *Flow rate*		Potenza *Power*		Portata *Flow rate*		Potenza *Power*		Peso *Weight*
		l/min	GPM	HP	kW	l/min	GPM	HP	kW	l/min	GPM	HP	kW	l/min	GPM	HP	kW	l/min	GPM	HP	kW	Kg
KAPPA 25	400	21.2	5.6	0.2	0.2	19.2	5.1	0.4	0.3	18.6	4.9	0.5	0.4	18.1	4.8	1.0	0.7	17.6	4.6	1.4	1.0	8
	450	24.0	6.3	0.2	0.2	21.2	5.6	0.4	0.3	20.5	5.4	0.6	0.4	19.9	5.3	1.0	0.8	19.4	5.1	1.5	1.1	
	500	26.8	7.1	0.3	0.2	23.2	6.1	0.5	0.3	22.4	5.9	0.6	0.5	21.7	5.7	1.1	0.8	21.2	5.6	1.7	1.2	
	550	29.5	7.8	0.3	0.2	25.2	6.7	0.5	0.4	24.3	6.4	0.7	0.5	23.5	6.2	1.2	0.9	23.0	6.1	1.8	1.3	
KAPPA 32	400	28.6	7.6	0.3	0.2	22.2	5.9	0.4	0.3	21.6	5.7	0.6	0.5	21.1	5.6	1.1	0.8	20.7	5.5	1.6	1.2	8
	450	31.0	8.2	0.3	0.2	24.6	6.5	0.5	0.4	24.0	6.3	0.7	0.5	23.5	6.2	1.2	0.9	23.1	6.1	1.8	1.3	
	500	33.4	8.8	0.3	0.2	27.0	7.1	0.5	0.4	26.4	7.0	0.8	0.6	25.9	6.8	1.4	1.0	25.5	6.7	2.0	1.5	
	550	35.8	9.5	0.4	0.3	29.6	7.8	0.6	0.4	28.8	7.6	0.8	0.6	28.3	7.5	1.5	1.1	28.0	7.4	2.2	1.6	