KAPPA 15 A

max. 15.5 l/min - 4 GPM • 20 bar - 290 PSI • 1450 RPM

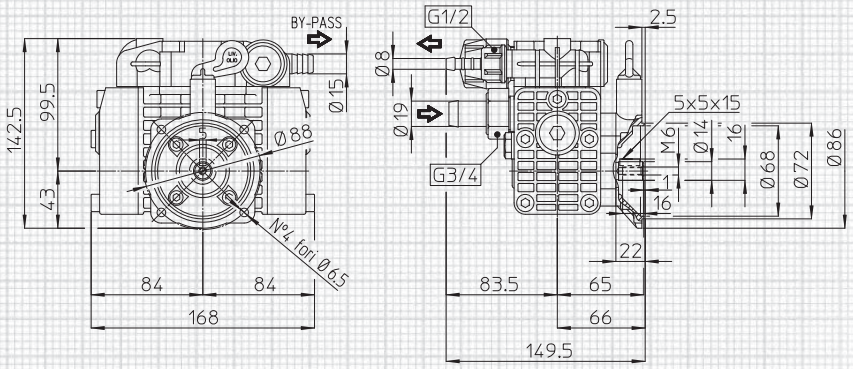

alberi P. di F. disponibili available P.T.O. shaft

11-15

applicazioni shaft adaptors

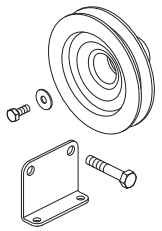

11

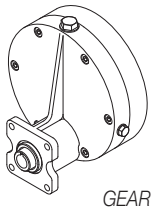

RIDUTTORI 15
Vedi pag. 42

GEAR REDUCTIONS 15
See page 42

MOD.	RPM	0 bar / 0 PSI				5 bar / 72 PSI				10 bar / 145 PSI				15 bar / 217 PSI				20 bar / 290 PSI				
		Portata *Flow rate*		Potenza *Power*		Portata *Flow rate*		Potenza *Power*		Portata *Flow rate*		Potenza *Power*		Portata *Flow rate*		Potenza *Power*		Portata *Flow rate*		Potenza *Power*		Peso *Weight*
		l/min	GPM	HP	kW	l/min	GPM	HP	kW	l/min	GPM	HP	kW	l/min	GPM	HP	kW	l/min	GPM	HP	kW	Kg
KAPPA 15 A	1300	14.0	3.7	0.1	0.1	11.2	3.0	0.2	0.2	10.5	2.8	0.3	0.2	10.2	2.7	0.4	0.3	10.0	2.6	0.5	0.4	2.5
	1350	14.5	3.8	0.1	0.1	11.5	3.0	0.2	0.2	10.7	2.8	0.3	0.2	10.4	2.7	0.4	0.3	10.2	2.7	0.5	0.4	
	1400	15.0	4.0	0.2	0.1	11.8	3.1	0.2	0.2	10.9	2.9	0.3	0.2	10.6	2.8	0.4	0.3	10.4	2.7	0.5	0.4	
	1450	15.5	4.1	0.2	0.1	12.1	3.2	0.2	0.2	11.1	2.9	0.3	0.2	10.8	2.9	0.4	0.3	10.6	2.8	0.6	0.4	